Condition-based Maintenance (CBM) Across the Enterprise

How to Leverage OSIsoft's PI System to Power CBM

.

OSIsoft, Inc. 777 Davis Street Suite 250 San Leandro, CA 94577 www.osisoft.com

Copyright © 2007 OSIsoft, Inc. All rights reserved. OSIsoft and the OSIsoft logo are trademarks of OSIsoft, Inc.

Introduction

Every company is dependent on some type of asset that keeps the business *in* business – be it a computer, a centrifuge, or a megawatt transformer. In a large enterprise, reducing costs related to asset maintenance, repair, and ultimate replacement is at the top of management concerns. Downtime in any network, manufacturing, or computer system ultimately results not only in high repair costs, but in customer dissatisfaction and lower potential sales. In response to these concerns, this paper presents a methodology for creating a real-time Condition-based Maintenance (CBM) solution with the OSIsoft PI System. It provides valuable guidelines for planning an enterprise system that monitors critical maintenance processes and assets. This paper provides answers to many high-priority CBM questions including:

- What is condition-based maintenance and how can it benefit your company?
- How to plan, create, and deploy a real-time CBM solution for all of the assets in your enterprise.
- How to create a framework that captures asset data, characteristics, and performance, and reuses asset models can save time and maintenance costs
- Why on-demand, role-based visualizations of asset conditions are essential for effective condition assessment and decision-making.
- How accurate real-time data reduces down time of systems through timely awareness of asset condition from workflow and triggered notifications

Many companies are already using the PI System to collect operations and manufacturing data. With a few additional components and a little technical assistance from the CBM Blueprint, it is possible to create an effective CBM solution.

The whitepaper is based on the Real-time CBM Blueprint, which was developed with the help of several OSIsoft customers in the utility industry. The whitepaper was created to provide effective condition-based maintenance of substation equipment, although this methodology can be applied to any asset dependent industry process.

What is CBM?

Maintaining processes and systems has evolved dramatically over the years. In the early years, maintenance consisted of reacting to mechanical breakdowns. As technology progressed, maintenance workers strove to time-based Preventive Maintenance Work orders. The solution gradually evolved from a time-based to a condition-based one. Today, effective maintenance systems are expected to detect early forms of degradation in predictive maintenance (PdM) practices in tandem with Condition-based Maintenance (CBM).

Copyright © 2007 OSIsoft, Inc. All rights reserved. OSIsoft and the OSIsoft logo are trademarks of OSIsoft, Inc.

Predictive Maintenance

PdM defines methods to predict or diagnose problems in a piece of equipment based on trending of test results. These methods use non-intrusive testing techniques to measure and compute equipment performance trends.

Condition-based maintenance (CBM) is a methodology that combines predictive and preventive maintenance with real-time monitoring. PdM uses CBM systems to detect fault sources well in advance of failure, making maintenance a proactive process. CBM accurately detects the current state of mechanical systems and predicts the systems' ability to perform without failure. It uses the stressor levels created during the machinery design process, measures suitable parameters to quantify the existing stressor levels, and corrects operating environments to make these levels compatible with economic production versus equipment lifetimes.

PdM + CBM = Holistic Maintenance

CBM adds two important dimensions to classical PdM solutions. First, CBM looks at the system and all of its assets. This holistic approach to maintenance represents a major shift from the fragmented technologies of the past. While CBM can be implemented in single steps, its greatest potential is realized when it is applied consistently and evenly across an entire asset class, employing the full range of maintenance concepts.

The second added dimension is the concept of extending maintenance intervals. CBM replaces arbitrarily timed maintenance with scheduled maintenance warranted by the equipment condition. It advocates the analysis of equipment condition data to allow planning and scheduling of maintenance activities or repairs *before* functional failure. With CBM, organizations perform maintenance only when needed to prevent operational deficiencies or failures, to eliminate costly periodic maintenance, and to significantly reduce the likelihood of mechanical failures.

Why Do You Need Condition-based Maintenance?

As manufacturing and utility companies become more competitive in a global market, increased availability becomes an issue. Companies need to run traditional regulated businesses competitively, reduce maintenance costs, and manage investment and assets strategically and efficiently. Likewise, in an unregulated market, customer service and resulting customer satisfaction are essential. Utility companies strive to maximize performance at the lowest lifecycle cost, while improving system reliability by eliminating catastrophic equipment failures.

Today, a proactive approach that can identify and act on maintenance problems makes good business sense. CBM strives to identify incipient faults *before* they become critical. The economic relationship between fewer breakdowns and more uptime should be obvious. In fact, the methodologies that facilitate this relationship are called “best practices.” The pharmaceutical industry has embraced Good Manufacturing Practices (GMP), and other industries such as metals, materials, and mining have adopted Six

Copyright © 2007 OSIsoft, Inc. All rights reserved. OSIsoft and the OSIsoft logo are trademarks of OSIsoft, Inc.

Sigma. Yet CBM, as a best practice, has not been widely embraced by the manufacturing and utilities industries. Why not?

One faulty perception affecting adoption rates is that CBM solutions require new technologies and cannot work with older systems. Many companies are not prepared to retire systems if they still work well. Rather, they want to use the equipment more efficiently, extend the equipment's life, and improve its performance. The OSIsoft CBM solution combats this perception because it fits in legacy environments and allows you to access data from older systems to extend the life of your operational assets.

Introducing the Real-time CBM Methodology

The CBM methodology offers a set of guidelines to implement a condition-based maintenance best practice solution with OSIsoft PI System tools.

Managing Expectations

The utilities interviewed for this paper expected to meet a set of common business and technical objectives from the real-time CBM implementation. Most utilities expect to minimize personnel dependency, such as the resources and training required to analyze assets. At the same time, users need to access to the same data to ensure that they use the same numbers for analysis.

Reducing costs as a result of proactive and predictive real-time maintenance is mandatory. To do so, they realize that they need common access to data from all equipment through a web-based portal. Through this portal, they want to drill down to the underlying transformed or raw data driving the asset conditions. Examples of asset conditions that might appear in the web-based portal include:

- Weekly general inspections
- Monthly equipment inspections
- General asset information
- Real-time equipment parameters such as voltage, current, or temperature
- Anomalies, such as hydrogen in transformer oil

Utilities expect the site to notify personnel when systems or assets deviate from acceptable performance, driven by automated analysis, triggers, and / or notifications. Specifically, the appropriate users need to receive an email notification for an event, to respond to that email, and to have the website acknowledge that the issue was assigned. Users also want to fine tune configuration and processes according to external factors and conditions to achieve greater asset efficiency, and to be able to create reports to summarize conditions and the results of CBM practices as needed.

The remainder of this document shows how a well designed CBM plan and Web portal site can meet these expectations, optimize utility processes, and reduce costs.

Copyright © 2007 OSIsoft, Inc. All rights reserved. OSIsoft and the OSIsoft logo are trademarks of OSIsoft, Inc.

Collecting and Modeling the Data

The CBM methodology involves the following three steps.

1. Collect all relevant data needed to monitor and analyze all maintenance units, systems, and devices and ensure that it can be accessed in real-time.
2. Structure the real-time data for calculations, computation, analysis, visualization, service-reuse, and scalability.
3. Create a portal site to visualize the real-time data, to create reports, and to report and act on problems as they occur or alarm/alert and early warning.

See Figure 1 for the CBM architecture to see how these steps work together.

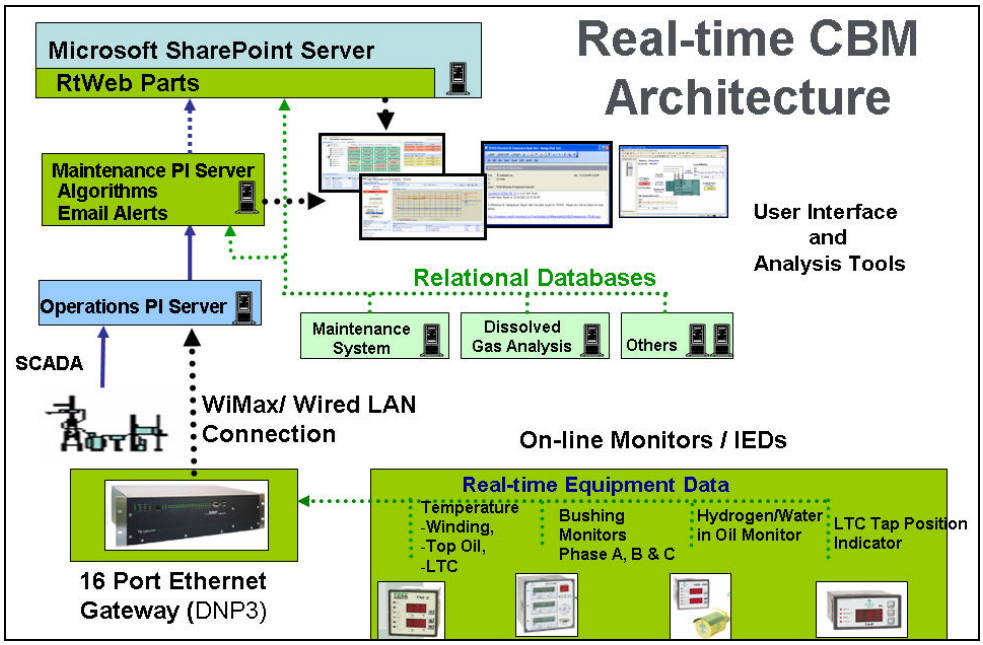

Figure 1. A typical real-time CBM architecture for a utility company

Collecting the CBM Data

Data drives any business process – and maintenance is no exception. With plentiful and reliable data, it is possible to perform preventive and predictive maintenance. A typical mid-sized utility must maintain several facilities, hundreds of substations and distribution circuits, several hundred thousand distribution poles and transformers, and millions of electric meters. The PI System must be able to monitor each and every substation, circuit, pole, transformer, and meter. Before beginning this process, make sure that your PI server is large enough to handle the amount of collected data. The first step involves identifying the assets—in this case, substations and related devices—and ensuring that the relevant sensor data is archived in the PI server for these assets.

Copyright © 2007 OSIsoft, Inc. All rights reserved. OSIsoft and the OSIsoft logo are trademarks of OSIsoft, Inc.

OSIsoft offers a library of over 400 standard smart connectors, to provide connectivity to most distributed control systems, SCADA, PLC, automation solutions, lab, and other business information systems. A few customers also use the PI-SDK to develop custom interfaces to devices. Because of this wealth of connectivity capability, the first step in the process is usually just a "check" on the checklist for those assets for which you are already collecting state information.

Once the data is in the PI server, the RtPortal thin client products can use it through connection to RtBaseline Services. RtBaseline Services is the data service included with RtWebParts (for Microsoft SharePoint) and iViews (for SAP Enterprise Portal). These services provide a centralized data source definition for pluggable user interface components to retrieve data from PI systems, relational databases, and web services. Through RtBaseline Services, a thin client application, such as RtWebParts or RtReports, can access any of the data sources and queries defined on the server. Users of the portal web site are presented with a consistent and efficient support for data access across client applications. All data, including relational data, can be accessed in real-time.

Structuring the CBM Data for Analysis

To analyze the data, you must first structure it. OSIsoft offers two powerful tools: Analysis Framework (AF) and the PI Module Database.

Analysis Framework (AF) enables you to organize data into usable and reusable asset structures. AF is a managed environment for building contextual models, accessing and integrating data, and performing analyses. At the heart of AF are fundamental components: a metadata warehouse, templates, and advanced analytics.

The value of AF is reuse and scalability. For example, if most sites have similar assets and require the same type of information, you can save time by creating one template and reusing it for each new site. AF allows you to configure, rather than program data references and formulas. The extensive group of formula and unit of measurement (UOM) pull-down menus and libraries allow any knowledgeable user to set sophisticated calculations and formulas.

Once you build templates in AF, you can add analysis rules, which contain contextual logic. The rules apply to a template rather than to a specific item or asset. An analysis rule applies calculations to multiple models or element groups of the same type. For example, it might view a device as an object with a defined type of input and output. You can apply the calculation to any device that has the defined input and output. In this way, you can also reuse analysis rules throughout the enterprise. Any changes you make to the rule will also be propagated to any related analysis rule.

The PI Module Database sorts content into useful groups, helps organize real-time data, stores parameters or specifications, and makes them ready for use in programs and displays. The PI Module DataBase is often used in the management of event-driven and

Copyright © 2007 OSIsoft, Inc. All rights reserved. OSIsoft and the OSIsoft logo are trademarks of OSIsoft, Inc.

batch processes. It groups equipment, operations, and phases in a unified hierarchy and can identify tags by referencing actual pieces of equipment and manufacturing processes. Many of the examples in CBM Blueprint use the Module Database.

As part of its 2007 release of the PI System, OSIsoft will offer a new framework —called the PI Systems' Data Directory Service, which provides data organization, search, and association capabilities within the PI System. Data Directory will allow users to create asset templates that describe their production systems, instrumentation, and relationships. Once these templates and /or relationship models are created, they can be exposed to PI System clients. With this capability, users can infuse rich content into their views of production environments, which ultimately will support real-time decision-making. Module Database users will be able to automatically migrate their saved asset information and data to the Data Directory Service.

Creating a CBM Portal Site

The ability to analyze and visualize data in real-time is a key factor in monitoring maintenance processes and assets. The heart of the real-time CBM solution is a web portal, which provides efficient access to all asset information related to a potential maintenance condition.

CBM Portal Architecture

A portal contains two architectural frameworks: an enabling back-end and a rendering visualization framework. The enabling framework is a highly extensible back-end that contains many powerful elements including: an operating system, a search engine, email and messaging, databases, services to access legacy and logic data, advanced collaboration tools, composite application abilities, content libraries, and communications access. Through a database server and data brokers, the portal can leverage historical systems and make the data available through low-cost, easy-to-administer interfaces.

In the real-time CBM system, the enabling back-end combines portal technology (such as Microsoft SharePoint technology or SAP Portal) and PI System tools and applications. The rendering visualization framework, referred to as a dashboard, is created with OSIsoft's RtWebParts, which are part of the RtPortal suite of visualization products. The PI System drives the real-time data in the portal's pluggable user interface components, which can be arranged in a dashboard format.

Portal sites can be designed as one-stop-shops for users. Sites can be easily customized to meet role-based needs within the organization. A user can not only drill down by asset, but see a custom view that has been designed according to role. A manager might see an overview, while the maintenance supervisor may view an asset detail. The RtWebPart, RtMessenger, leverages Microsoft Messenger technology, and enables users to collaborate on issues through the portal dashboard.

Context is the truly powerful aspect of OSIsoft's real-time CBM solution. RtPortal thin clients easily create structures that map to the underlying CBM business and technical

Copyright © 2007 OSIsoft, Inc. All rights reserved. OSIsoft and the OSIsoft logo are trademarks of OSIsoft, Inc.

data, preserving context—with regard to an asset, system, or unit—throughout the display. Context relativity is the logic that turns CBM processes into a well-designed page. With context relativity, a portal site displays and integrates heterogeneous data, disparate applications, and images together. When context is implemented in a CBM portal site, all users can view and maintain the same version of documents and data, yet see the data in the way that is most relevant for a given asset, system, or unit.

OSIsoft CBM Prerequisites

The following table defines the PI System tools that make up a real-time CBM solution. See Figure 2 for a proposed CBM solution architecture.

PI System Applications and Tools	Description	CBM Role
Advanced Computing Engine (ACE)	Supports the design of complex process calculations with minimal code writing and eases the process of applying these calculations to multiple units and processes.	Schedules and executes the real-time maintenance rules and alerting.
PI ActiveView	Renders web-based acknowledgement of alerts using VBAscripts in ProcessBook	
PI DataLink (Excel)	Allows PI to access and deliver data to and from spreadsheet programs and create easy-to-read reports	
PI Tag Configurator (Excel Add-In)	An Excel spreadsheet add-in used to create new tags and to modify the attributes of existing tags.	
PI Module Database Builder (Excel Add-In)	Sorts PI System contents into useful groups; helps organize real-time data, stores parameters or specifications, and makes them ready for use in programs and displays.	Supports algorithm scale up and navigation for assets within visualization layer.
PI OLEDB	Provides universal data access to PI.	A query to provide exception-based reporting of alerts.
PI ProcessBook	Graphics package that allows users to create dynamic, interactive graphical displays featuring real-time PI data.	Create regional group, site overview, and asset overview displays to import to RtWebParts.

Copyright © 2007 OSIsoft, Inc. All rights reserved. OSIsoft and the OSIsoft logo are trademarks of OSIsoft, Inc.

PI System Applications and Tools	Description	CBM Role
RtAlerts	Real-time alert and notification package.	Provides e-mail notification to selected maintenance personnel when the real-time analysis detects a rule violation.
RtReports	Easy to use reporting system that generates and manages compliant electronic batch reports from the PI System and other data sources.	Create asset, exception, historical, and real-time reports as needed.
PI System Management Console	Console to manage PI System from a PC.	Creates digital states to monitor alert levels.
PI System Manager's Tools (SMT)	A set of applications to administer the PI System from client PCs.	GUI to create Module Database.

Copyright © 2007 OSIsoft, Inc. All rights reserved. OSIsoft and the OSIsoft logo are trademarks of OSIsoft, Inc.

Implementation Overview for the Real-time CBM Portal

This section describes the planning stage and the four visualization levels defined as the basis of the Blueprint: a Maintenance Overview, a Site Detail, an Asset Detail, and an Algorithm Detail. These visualization levels are created with RtWebParts and ProcessBook and are built on the Microsoft SharePoint Portal.

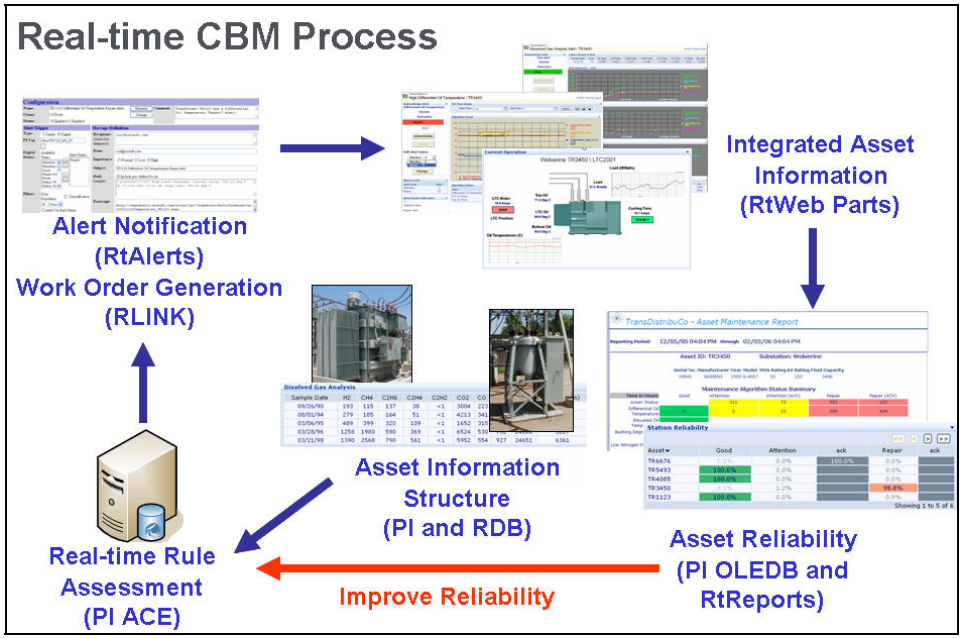

Figure 2. A real-time CBM process using OSIsoft tools

Copyright © 2007 OSIsoft, Inc. All rights reserved. OSIsoft and the OSIsoft logo are trademarks of OSIsoft, Inc.

Planning the CBM Portal

The following guidelines will help you to organize the information required for the CBM Portal.

1. Define the project scope by listing the sites and assets within those sites to be monitored by your CBM installation.
    a. Organize the sites in your list by region.
    b. Identify the maintenance alert algorithms for each asset type.
    c. Identify the alert level names to indicate each level of maintenance alert severity.
    d. Identify all data sources required to provide information in the Site, Asset, and Algorithm Detail portal pages. This list includes PI servers, relational databases, web services, documents, and other web sites you want to make available to users. Be sure to obtain database logon credentials, where necessary.
2. Define naming conventions for SharePoint WebPart Pages. Page names must include a combination of site, asset ID, and algorithm names. They can then be constructed by SQL statements to create datasets containing URLs for hyperlinks in the RtTable WebPart.
3. Create ProcessBook displays for individual Site Overviews. You can copy these from existing operating displays, if available.
4. Create a standard ProcessBook display for each asset type to use in the Asset Detail page, such as a standard transformer display.

Copyright © 2007 OSIsoft, Inc. All rights reserved. OSIsoft and the OSIsoft logo are trademarks of OSIsoft, Inc.

Maintenance Overview

The Maintenance Overview provides access to all sites by regional group and to individual assets in unacknowledged maintenance alert statuses. The highest alert status for each site is indicated with a multi-stated background behind the rectangular site link buttons. The multi-state graphic is created in ProcessBook. The Eastern District in the list view is linked to a graphic of the Eastern Substation Maintenance Status appears next to it. The graphic contains three digital states: green represents healthy, yellow requires attention, and red requires repair. The yellow rimmed substations appear in greater detail in the far right and the assets requiring attention are below it. The bottom table displays an RtTable WebPart that contains a list of recent work order activities from the maintenance system.

To drill down to the Site level, a user can click any one of the asset rectangles in the Overview graphic. In Figure 3, the user clicked the Wolverine site, which has a red rimmed rectangle, and requires repair.

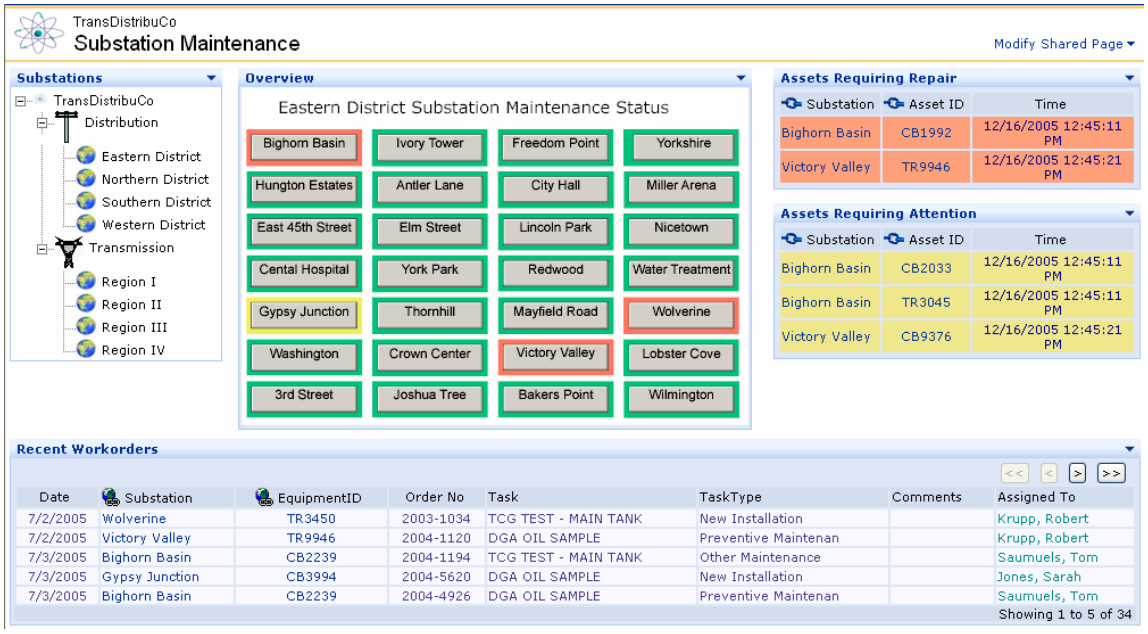

Figure 3. The real-time CBM Maintenance Level RtWebParts page

Copyright © 2007 OSIsoft, Inc. All rights reserved. OSIsoft and the OSIsoft logo are trademarks of OSIsoft, Inc.

Site Level

The Site Detail displays the maintenance alert status of all the assets located at a specific site. The following site, called Wolverine ST555, displays Wolverine's current multi state operating conditions. The graphic shows that the distribution circuit TR3476 requires attention and the circuit TR3450 is in need of repair. Other information such as Station Assets, Station Contacts, and work orders all relate to the Wolverine Site.

To drill down to an Asset Detail, click the small grey box that displays the asset ID.

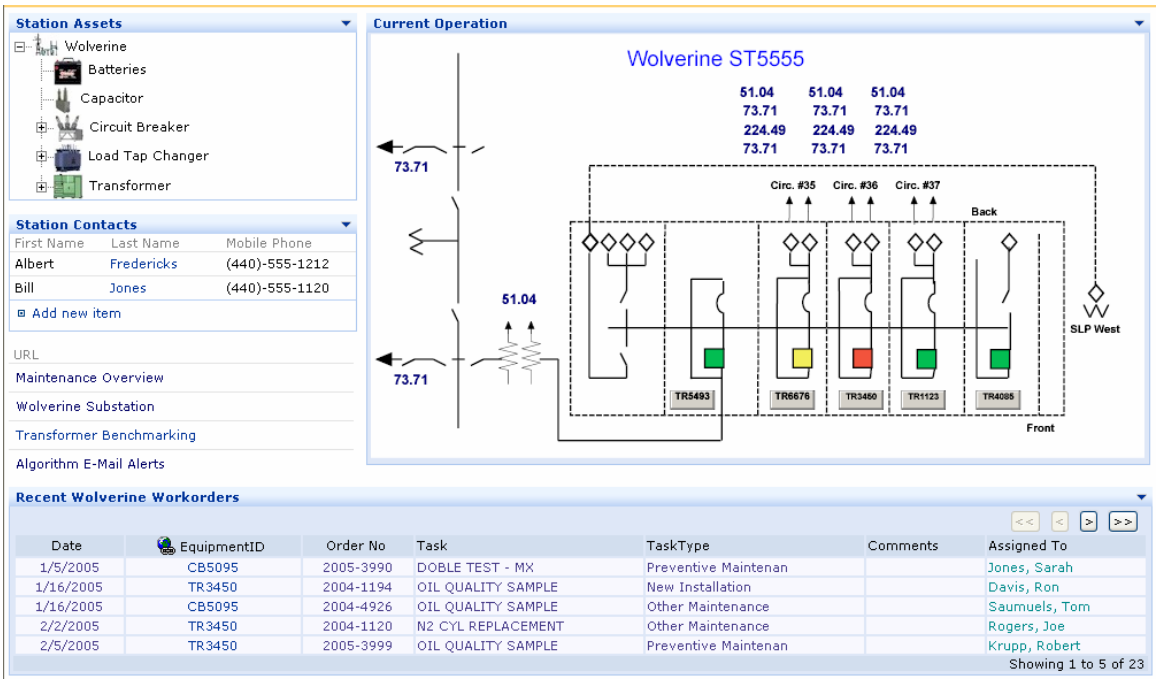

Figure 4. The real-time CBM Site Level page

Copyright © 2007 OSIsoft, Inc. All rights reserved. OSIsoft and the OSIsoft logo are trademarks of OSIsoft, Inc.

Asset Detail

The Asset Detail shows the current operation and alert status of each maintenance algorithm used to assess the asset's condition. The RtGraphic Web part shows Wolverine TR3450, the asset that needs a repair. Note that the graphic displays all the key operating variables that contribute to the asset's maintenance health assessment. When you select an asset from the Station Equipment tree view, the page context changes to display information for that selected asset.

The OSIsoft Advanced Computing Engine (ACE) determines the highest maintenance status for each algorithm used to test an asset. It then assigns that status to the asset. Finally, it determines the highest maintenance status for each asset belonging to a site and assigns that status to the site.

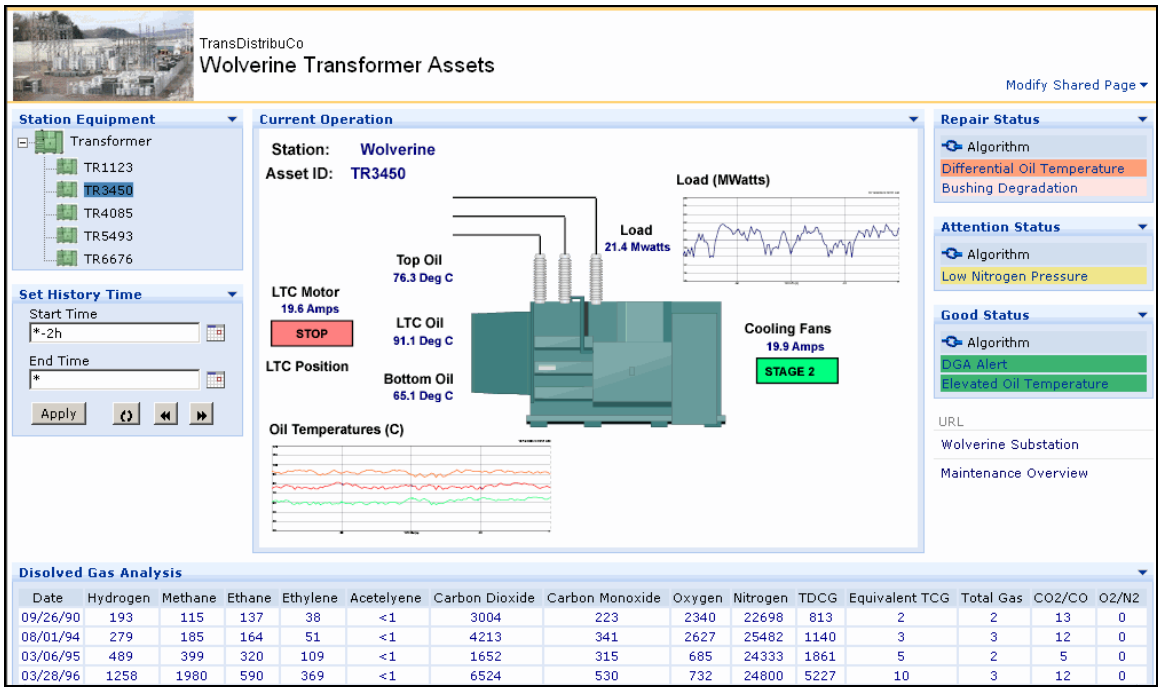

Date	Hydrogen	Methane	Ethane	Ethylene	Acetelyene	Carbon Dioxide	Carbon Monoxide	Oxygen	Nitrogen	TDCG	Equivalent TCG	Total Gas	CO2/CO	O2/N2
09/26/90	193	115	137	38	<1	3004	223	2340	22698	813	2	2	13	0
08/01/94	279	185	164	51	<1	4213	341	2627	25482	1140	3	3	12	0
03/06/95	489	399	320	109	<1	1652	315	685	24333	1861	5	2	5	0
03/28/96	1258	1980	590	369	<1	6524	530	732	24800	5227	10	3	12	0

Figure 5. The real-time CBM Assets Level page

Copyright © 2007 OSIsoft, Inc. All rights reserved. OSIsoft and the OSIsoft logo are trademarks of OSIsoft, Inc.

Algorithm Detail

We recommend that you develop a page for each algorithm you create to provide analytical information related to the maintenance rule. For example, an algorithm might test if the difference between two transformer temperatures is greater than the prescribed limits. The detail page for this algorithm may include a trend of PI data that represents inputs to the calculation, as well as averaged information. The following example shows the algorithm detail for the Wolverine TR3450 unit that required repair. The user can see that the unit has a high differential oil temperature that has previously required attention and must now be repaired. It also provides tables that show average values. Finally, the user can use the Set Time Range to view the differential oil temperature over time.

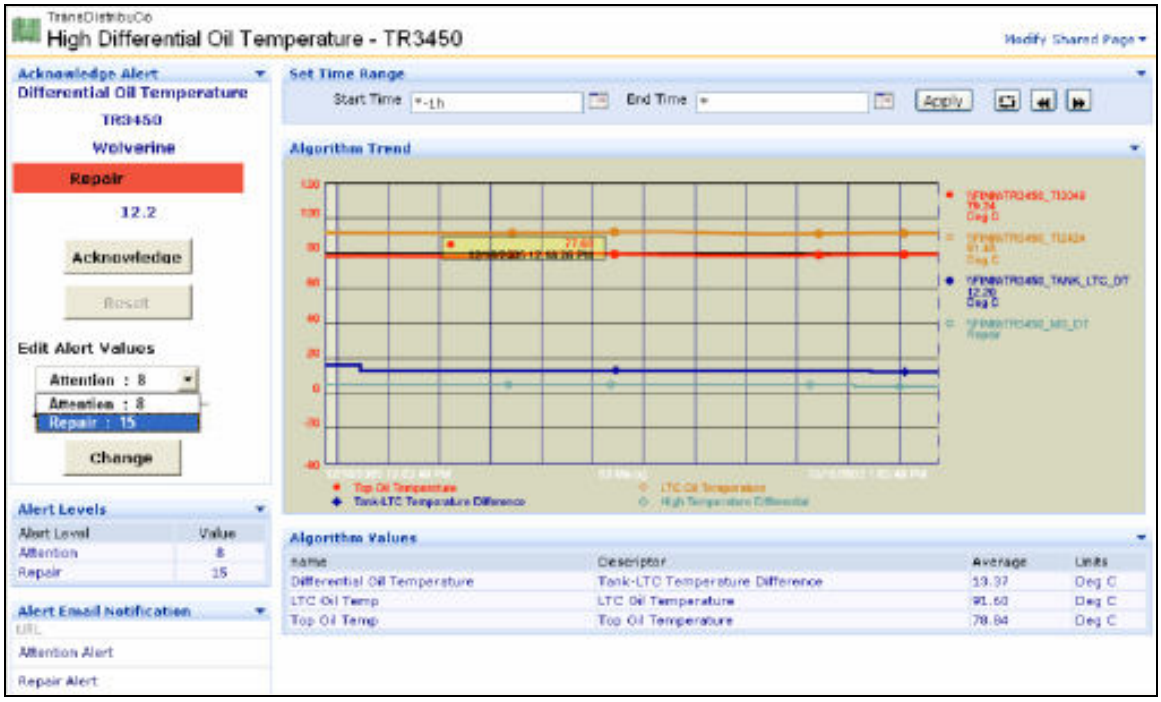

Figure 6. The real-time CBM Algorithm page

Reporting with RtReports

RtReports from OSIsoft is designed to work in tandem with RtWebParts and Analysis Framework. RtReports Version 3.0 has been extended to consume the functionality of RtBaseline Services. Users will use the RtBaseline Services Administration pages to configure Data sources and Datasets. If the CBM methodology is treated as a compliance issue, RtReports is also released in a compliance version.

Reports from RtReports are both easy to configure and even easier to use. Users can create report templates for a standard look and feel, as well as standardized data content.

Copyright © 2007 OSIsoft, Inc. All rights reserved. OSIsoft and the OSIsoft logo are trademarks of OSIsoft, Inc.

Whether you are rolling up digital states, or compiling a report on work orders, RtReports is strategic to any CBM solution.

Conclusion

As an OSIsoft customer, you have PI, you have archived your asset and system data in the PI archive, and your staff is familiar with PI tools. Implementing your CBM solution is a natural extension of the PI System, allowing you to continue to accrue all the benefits of your investment in the PI System.

Consider these benefits:

- *Ease of creation, deployment, and maintenance* of a real-time CBM solution, for all of the assets in your enterprise
- Ready availability of *on-demand, intuitive visualizations of asset condition* to support *real-time condition assessment and decision-making*
- *Reduced down time of systems* resulting from *timely awareness of asset condition* due to workflow and notifications triggered by accurate real-time data
- *Enhanced organizational capability and resource efficiencies* driven by a framework for capturing asset data, characteristics, and performance, and reuse of asset models
- *Increased customer satisfaction overall* due to higher returns on the asset base

If this paper interests you, we suggest that you contact OSIsoft at www.osisoft.com for a free copy of the Real-time CBM Blueprint.

Copyright © 2007 OSIsoft, Inc. All rights reserved. OSIsoft and the OSIsoft logo are trademarks of OSIsoft, Inc.